UniFi® Dream Wall

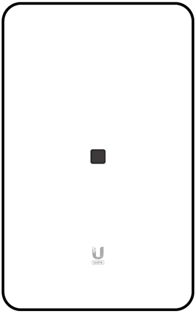

a

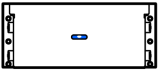

b

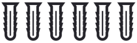

c

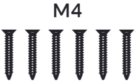

d

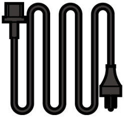

e

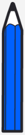

1

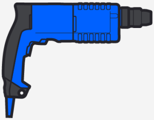

2

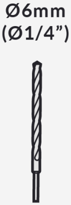

3

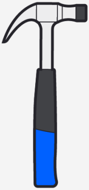

4

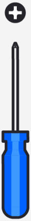

5

1

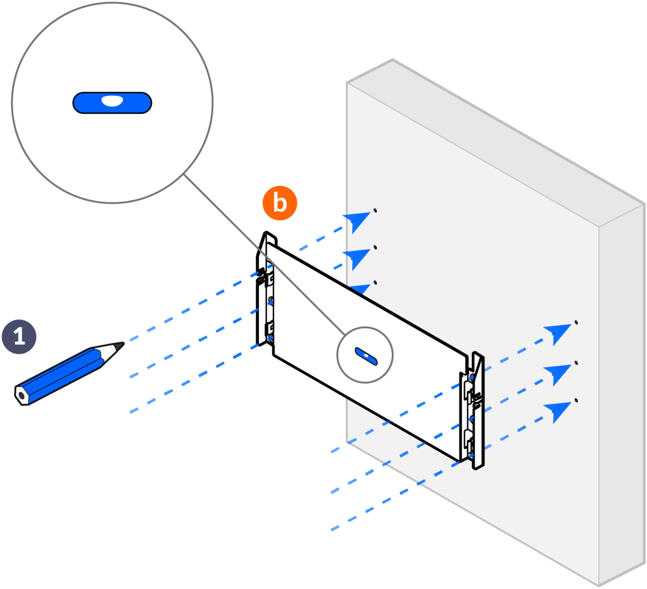

2

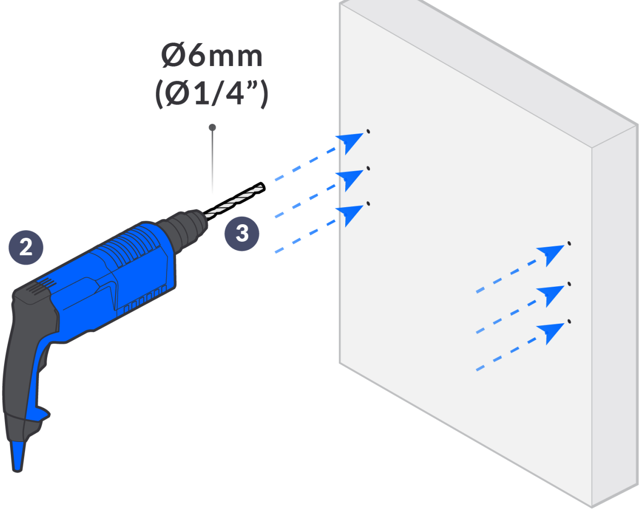

3

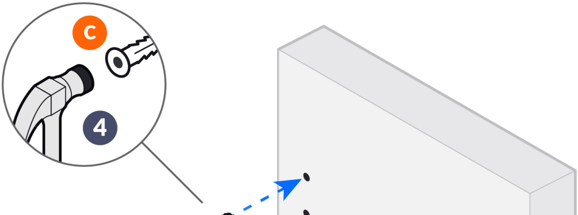

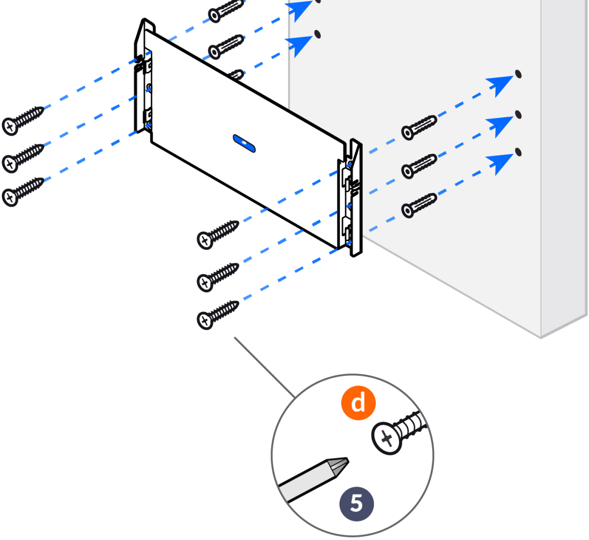

4

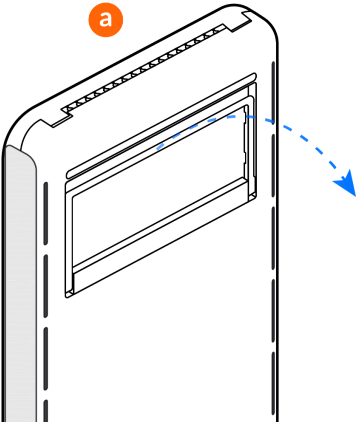

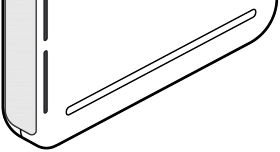

5

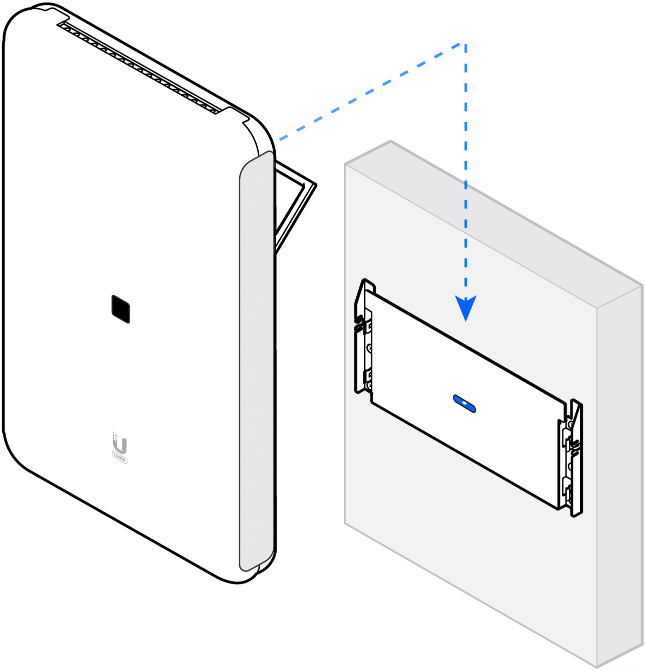

6

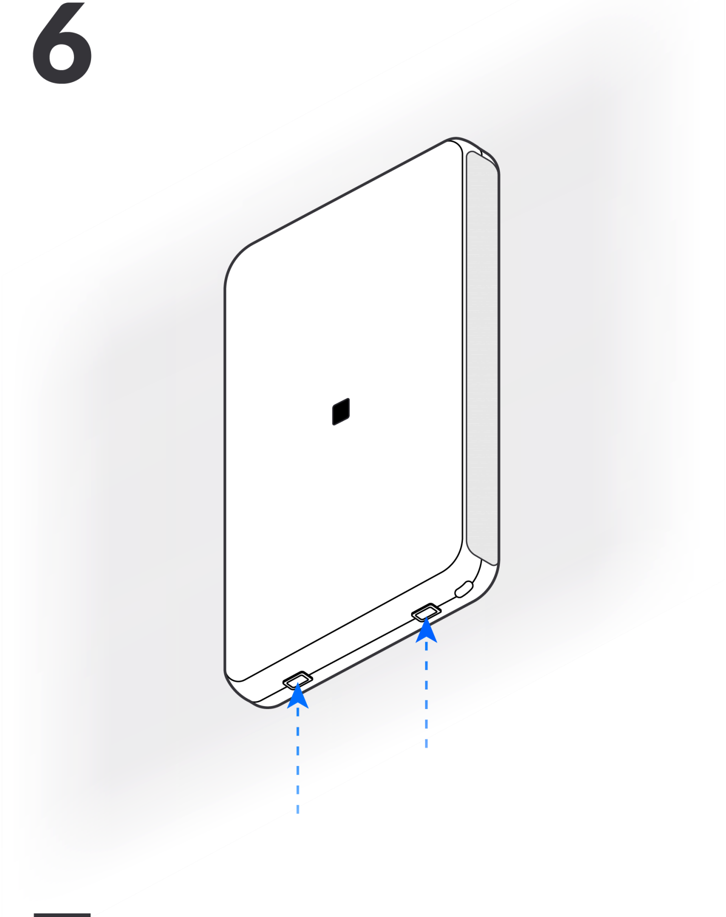

7

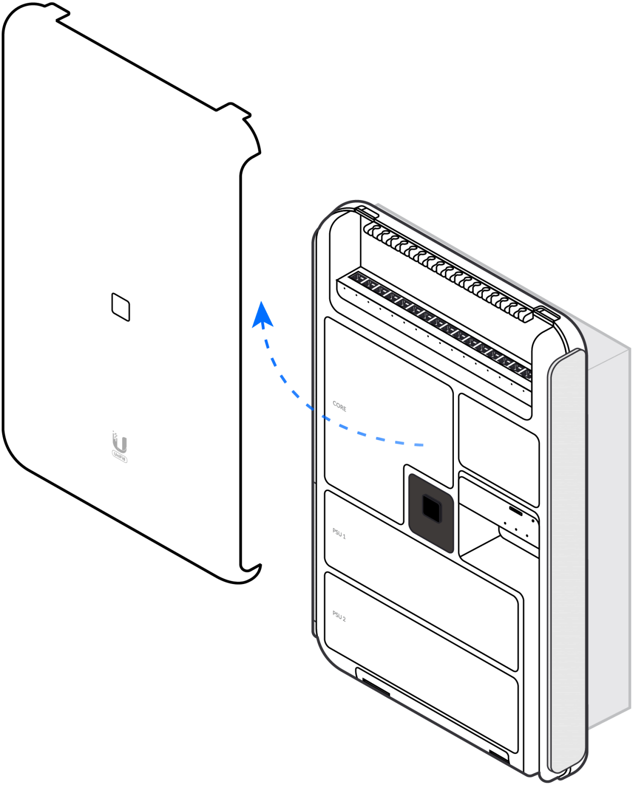
CORE
PSU 1
PSU 2

8

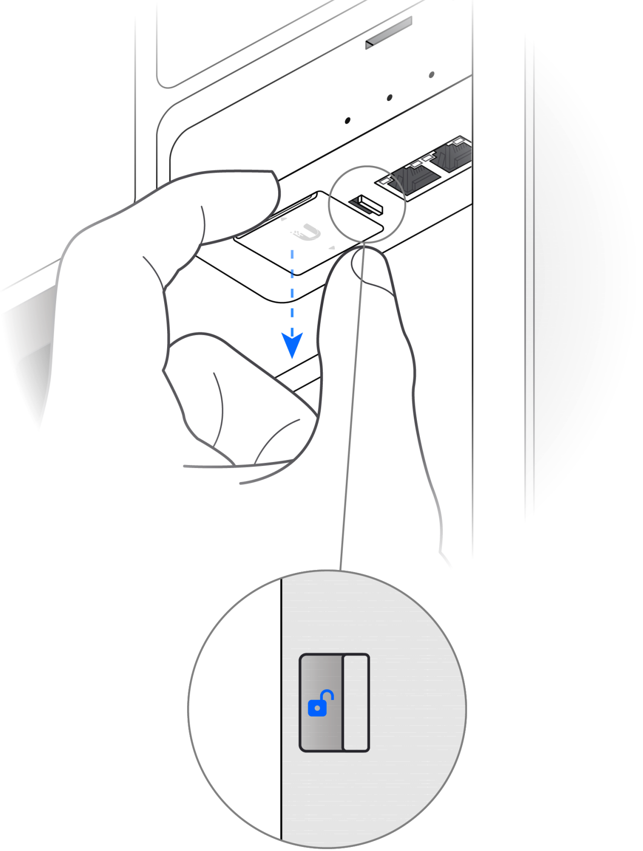

9

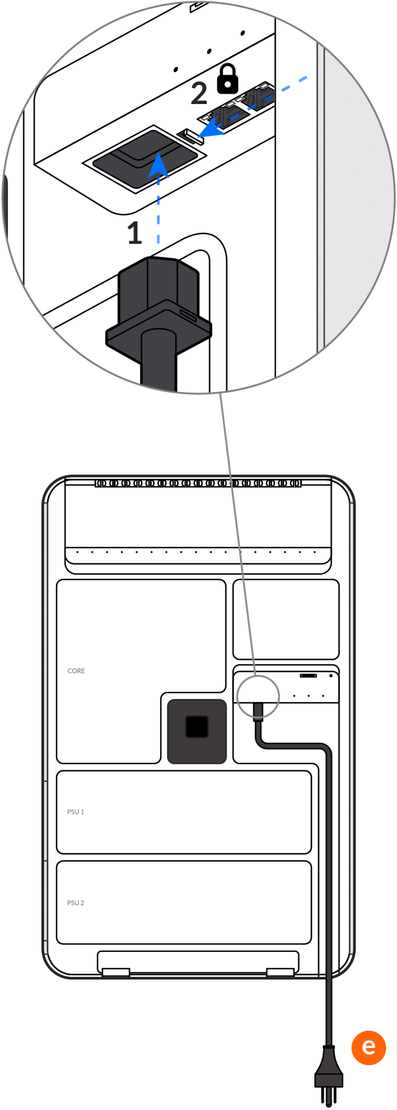
2
1
CORE
PSU 1
PSU 2
e

10

A

10G

Internet

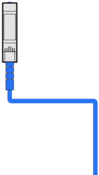

B

2.5G

Internet

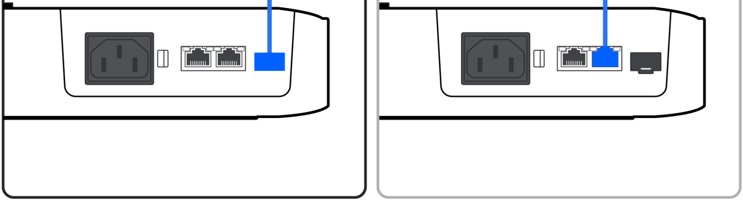

11

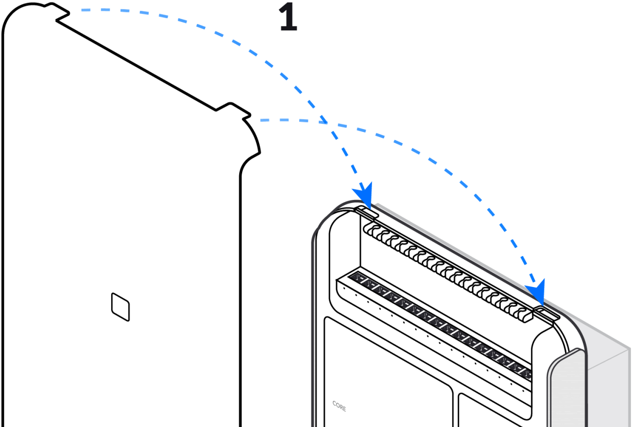

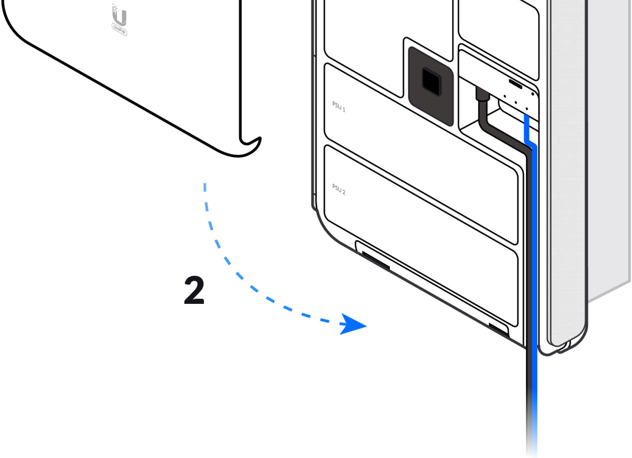

12

Download on the App Store

GET IT ON Google Play

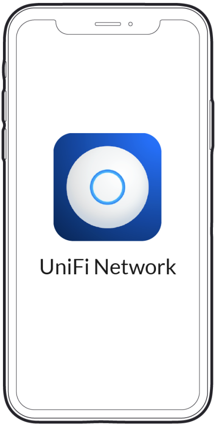
UniFi Network

13

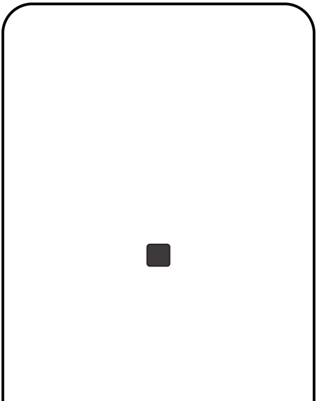

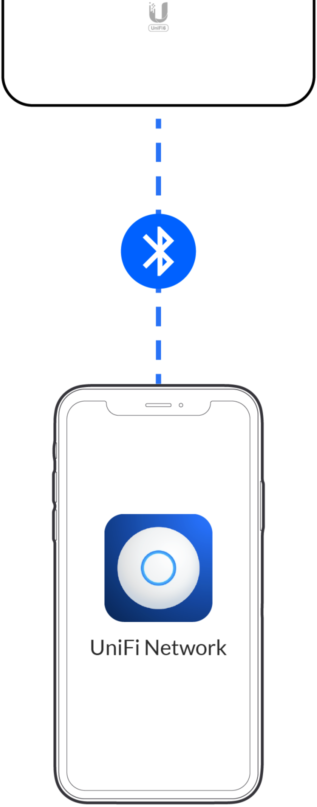
UniFi6
UniFi Network

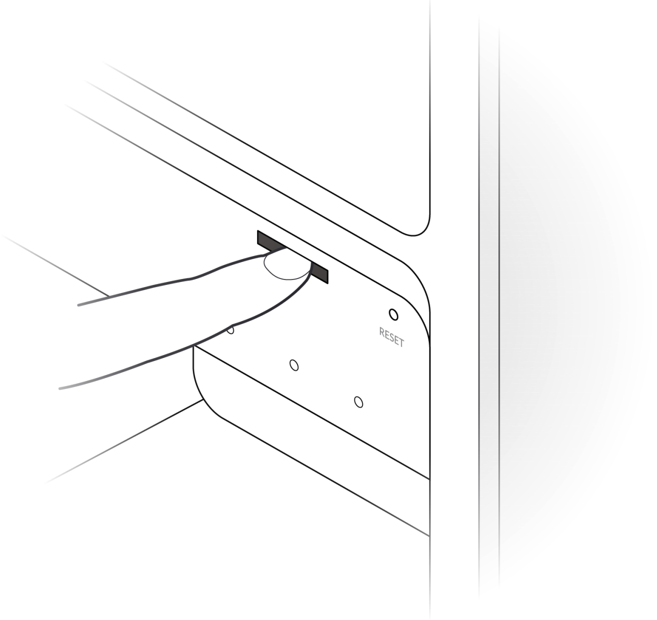

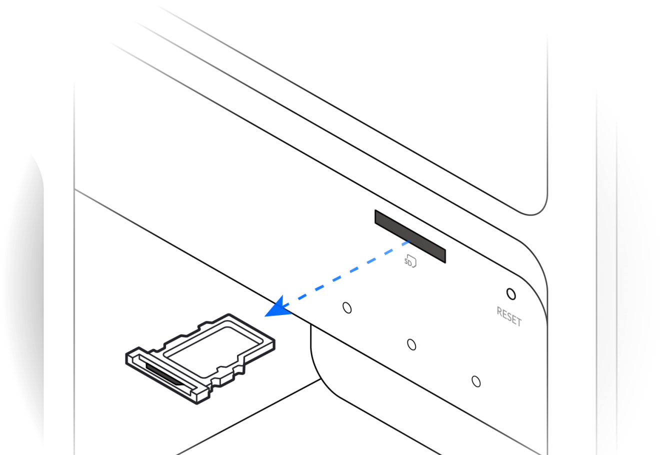

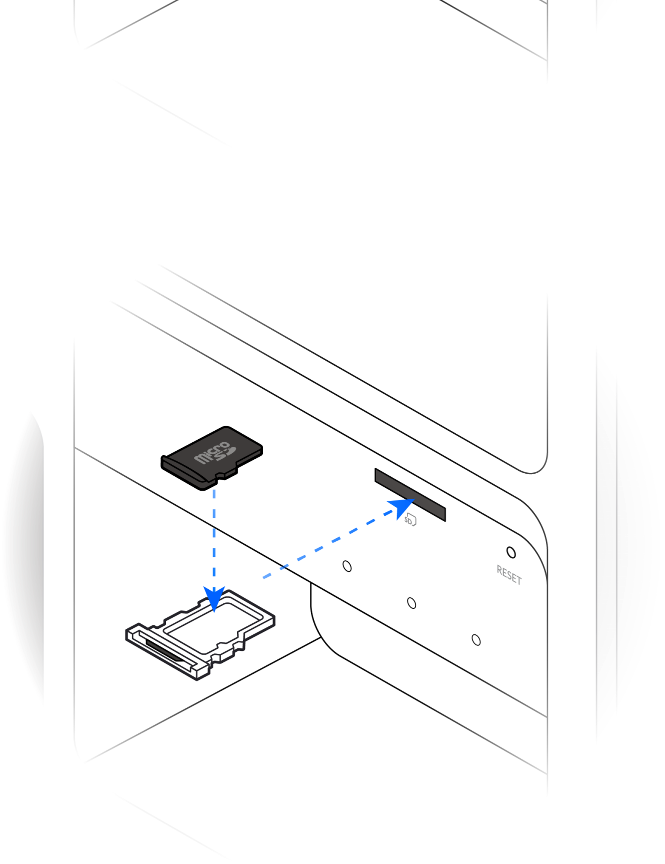
micro SD
SD
RESET

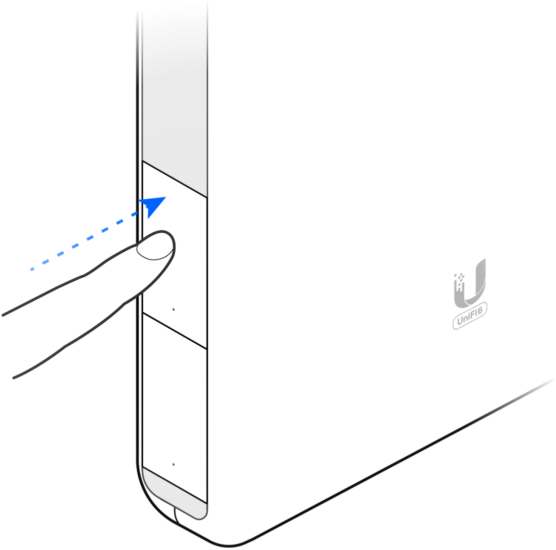

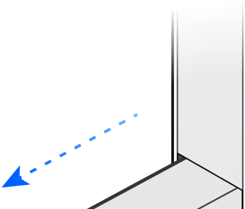

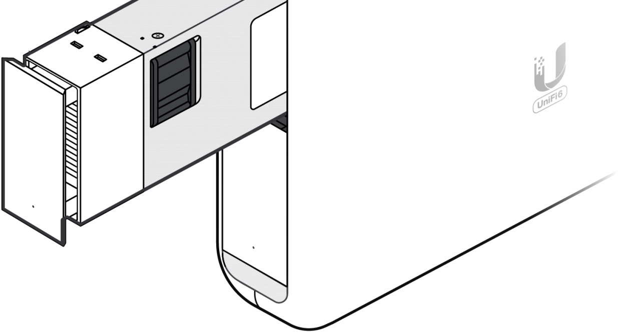

Get Answers

help.ui.com

UI Support

©2021 Ubiquiti Inc. All rights reserved. Ubiquiti, Ubiquiti Networks, the Ubiquiti U logo, UniFi, and Dream Wall are trademarks or registered trademarks of Ubiquiti Inc. in the United States and in other countries. App Store and the Apple logo are trademarks of Apple Inc., registered in the U.S. and other countries. Google Play and the Google Play logo are trademarks of Google LLC. All other trademarks are the property of their respective owners.